ITEM NO.	PART NUMBER	DESCRIPTION	QTY.	COMPONENT NOTES
1	50-00396	Connector, stereo plug, 3.5xL20.5 mm, brass, nickel plated, molding style	1	
2	30-00177	Wire, 2C BC, 28 AWG, 300V, 80C, 3.8 mm, foil + shield, PVC	1	
3	24-00265	Overmold, audio plug, 3.5 mm, twist lock, TIC	1	PVC, black
4	Heat Shrink	Heat shrink tubing, black	1	
5	Heat shrink	Heat shrink tubing, black	1	Covers shield wire

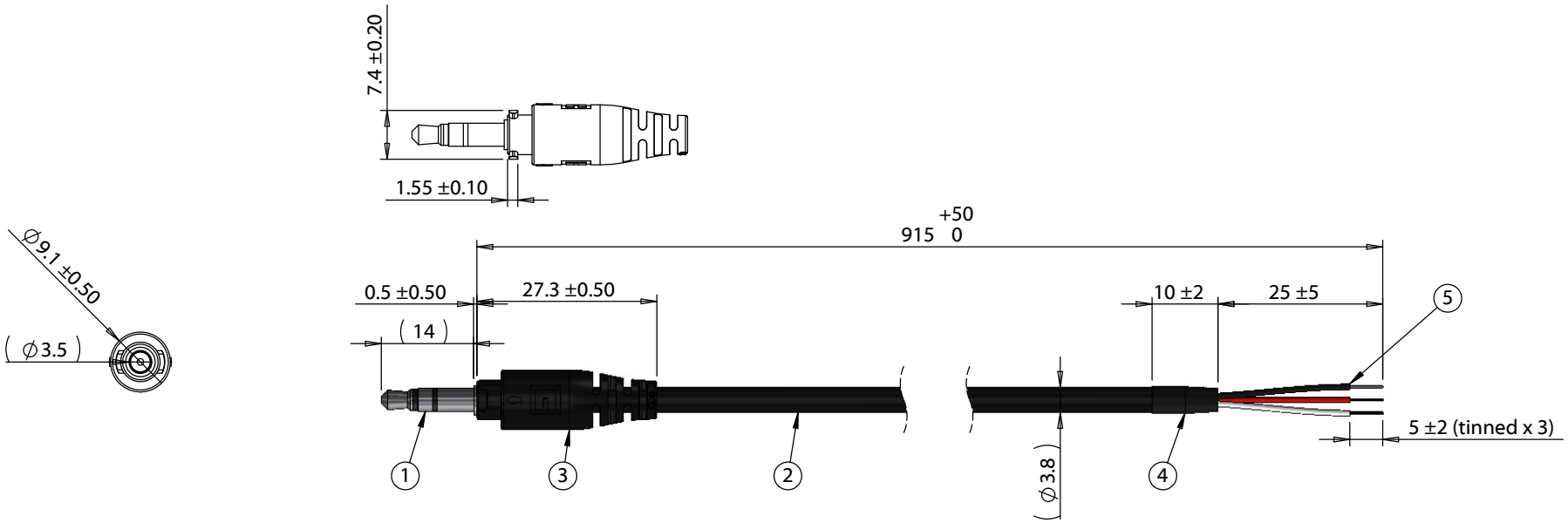

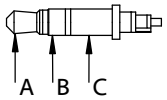

Wiring Diagram	
50-00396	wire color
A	red
B	white
C	shield/black

Notes:
Made to mate with cable assembly: 10-03406 and 10-03411
Functionally equivalent components may be substituted

Revision:	Date:	Description:
A	9/24/2019	Initial release

Prepared: AW Digitally signed by AW Date: 2019.09.24 15:16:22 -07'00'

Verified: CH Digitally signed by CH Date: 2019.09.25 15:45:19 -07'00'

Dimensions are in millimeters.
Tolerances:
X: ± 0.5 mm
X.X: ± 0.3 mm
X.XX: ± 0.05 mm

Notes:
RoHS compliant
Function test: no open, no short circuit, no intermittent

Description:
Cable, 915 mm, 3.5 mm 3C 50-00396 twist lock audio plug to 5 mm tinned, 28 AWG, 30-00177

TENSILITY
tel 1.541.323.3228 800 877.670.7118
fax 1.541.323.4202 web tensility.com

Size: A
Part number: 10-03405
Scale: 1:1
Sheet 1 of 1

To see a custom version of this cable assembly, call Tensility at 541-323-3228 or email engineering@tensility.com

5 4 3 2 1